Nesplon 24

Produktbeschreibung

Nesplon 24 valves are designed to keep industrial gas lines or multi utility panel boards safe; they're fitted with flame arrestors and gas check valves. They can be used with comburent gas (oxygen) and fuel gas.We recommend a full service of the Nesplon 24 valves in the case of a flashback, after 5 years from the date of installation and in any case after the time limit of 5 years plus 1 from the manufacturing date on the valve.

Normen

UNI EN ISO 9539 | UNI EN ISO 5175-1 | UNI 11627

Komponenten

CW614N brass body and cut-off.
AISI 316 sintered stainless steel flashback arrestor filter.
Stainless steel springs.
Aluminum gaskets.
NBR O-ring.

Wartungskit

CODE	DESCRIPTION
CK014	MAINTENANCE EQ NESPLON/24 SAFETY VALVE

Technische Daten

CODE	GAS	Q max.	P max.	INLET CONNECTION	OUTLET CONNECTION
VN24G2	FUELS	355 Nm³/h	4 bar	G3/4" F L	G3/4" M L
VN24O2	COMBURENTS	255 Nm³/h	10 bar	G3/4" F R	G3/4" M R

Behringer S.r.l. via Gualco 4, 16165 Genova ITALY
T +39 010 8309103 **F** +39 010 8309183 **e-mail** info@behringer.it **C.F.** e **P.I.** 01167840998

Technische bilder

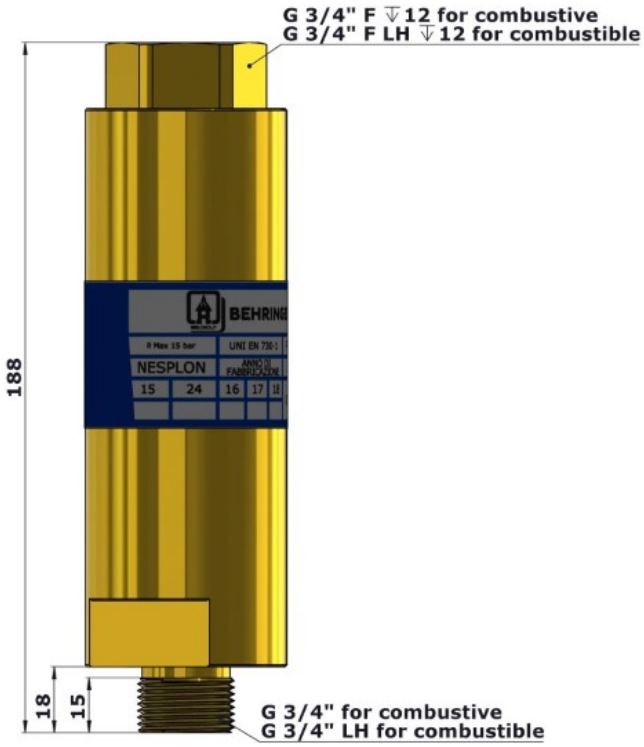

Behringer S.r.l. via Gualco 4, 16165 Genova ITALY
T +39 010 8309103 **F** +39 010 8309183 **e-mail** info@behringer.it **C.F.** e **P.I.** 01167840998