Organismo Notificato n. 0476
Notified Body nr. 0476

Humidifier

Product description

The humidifier is used in oxygen therapy to humidify the oxygen breathed by the patient; it is connected downstream of the flowmeter using a G 1/4" F R thread; it is a class IIa non-active medical device and is not supplied sterile; the jar is in Makrolon, biocompatible in accordance with ISO 10993-1 with a maximum capacity of 300 cc., cap, in plastic or metal, with a hose outlet; the humidifier (jar, cap, o-ring and silicone tube) can be placed in an autoclave up to a temperature of 134 ° C periodically for a maximum of 100 cycles at 121 ° and 126 °, 85 cycles at 134 ° for a maximum time of 10 total min / each (of which 6 of effective cycle at 134 °), excluding the diffuser.

Normatives

UNI CEI EN ISO 14971 | UNI EN ISO 8185 | UNI EN ISO 9360-1 | UNI EN ISO 15001

Components

Makrolon jar that can be sterilized in an autoclave at 134 °C.
One inlet with G 1/4" F R or M12x1 F swivel nut.
One hose connector outlet.
Silicone hose.
Polyethylene bubble diffuser.
White polypropylene or metal cap.
EPDM PEROX O-ring.

Technical data

CODE	VOLUME	CONNECTION	CAP	JAR	WEIGHT
HU004	300 cc	G1/4" M R	PVC	Makrolon 2458	0.20 kg
HU005	300 cc	G1/4" M R	Metal	Makrolon 2458	0.20 kg
HU008	300 cc	M12x1,25 M R	PVC	Makrolon 2458	0.20 kg

Behringer S.r.l. via Gualco 4, 16165 Genova ITALY
T +39 010 8309103 **F** +39 010 8309183 **e-mail** info@behringer.it **C.F.** e **P.I.** 01167840998

Technical Images

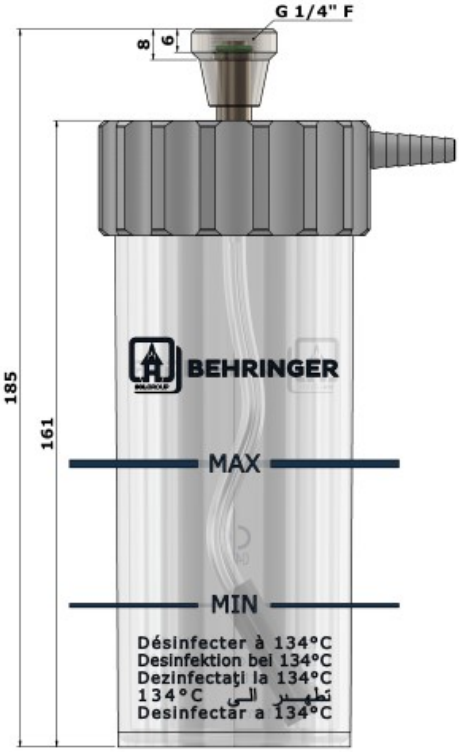

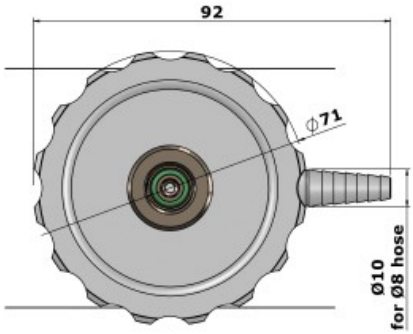

Behringer S.r.l. via Gualco 4, 16165 Genova ITALY
T +39 010 8309103 **F** +39 010 8309183 **e-mail** info@behringer.it **C.F.** e **P.I.** 01167840998