



Nesplon 400

Product description

The Nesplon 400 safety valve for high flowrate industrial gas lines performs three functions, flame arrestor, gas check and overpressure discharge in compliance with ISO 5175-1 standards.The Nesplon 400 valve comes with two 1" gas specific flanges and counter flanges.We recommend a full service of the Nesplon/400 valves in the case of a flashback, after 5 years from the date of installation and in any case after the time limit of 5 years plus 1 from the manufacturing date on the valve.

Normatives

UNI EN ISO 9539 | UNI EN ISO 5175-1 | UNI 11627

Components

Galvanized steel body.
AISI 316 sintered stainless steel flashback arrestor filter.
CW614N brass gas check and overpressure discharge valve.
Stainless steel springs.
Aluminum and NBR body gaskets.
FASIT 202 counter flange gaskets.

Maintenance kit

CODE	DESCRIPTION
CK015	SPARE EQ NESPLON/400
CV020	OVERPRESSURE VALVE ¾" F TAR.1,5BAR
CV023	OVERPRESSURE VALVE ¾" F TAR. 4BAR
CV024	OVERPRESSURE VALVE ¾" F TAR. 16BAR

Behringer S.r.l. via Gualco 4, 16165 Genova ITALY
T +39 010 8309103 **F** +39 010 8309183 **e-mail** info@behringer.it **C.F.** e **P.I.** 01167840998

Technical data

CODE	GAS	P overpressure	Q max.
VN400O1	OXYGEN	16 bar	400 m³/h
VN400G1	FUELS	4 bar	150 m³/h
VN400A1	ACETYLEN	1,5 bar	30 m³/h

Technical Images

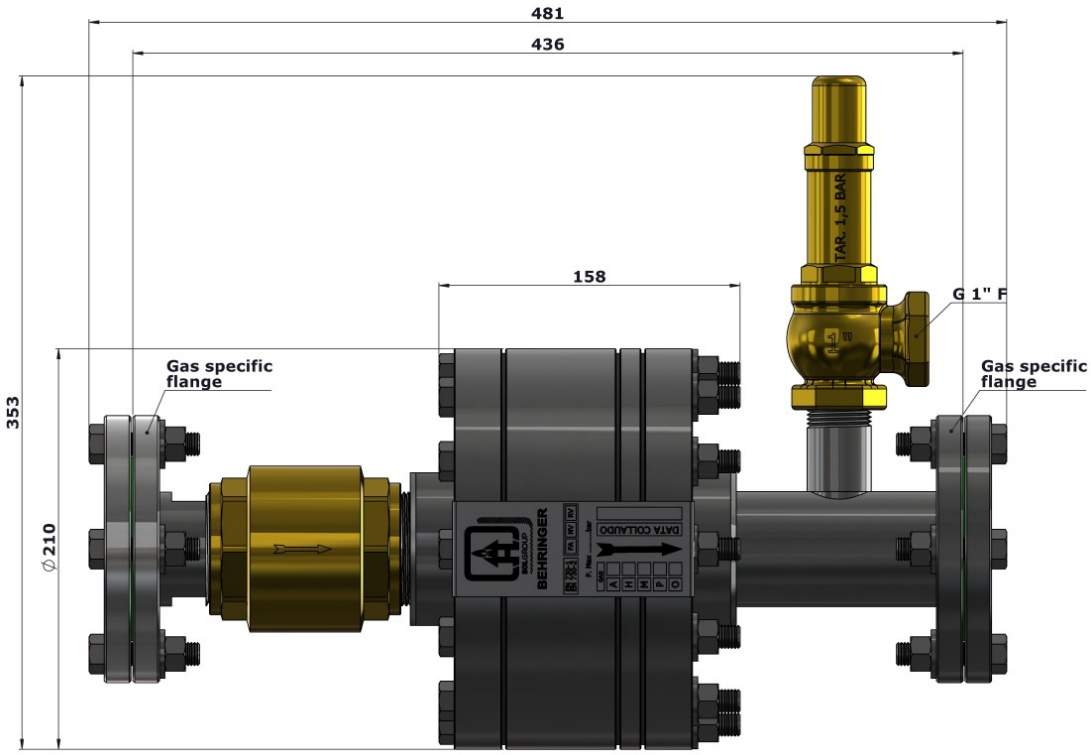

Behringer S.r.l. via Gualco 4, 16165 Genova ITALY
T +39 010 8309103 **F** +39 010 8309183 **e-mail** info@behringer.it **C.F.** e **P.I.** 01167840998