JUNIOR manifold pressure regulator

Product description

Pressure regulator for manifolds, suitable for food-grade gas, equipped with dual pressure gauge to show high and low pressure, used to reduce the pressure down to that of the line or of the equipment.Maximum inlet pressure is 200 bar, the outlet pressure is adjustable up to 12 bar.The gas inlet connection is sW21.7x1/14" 'A', the outlet is fitted with an Ø 8 hose connector.Its maximum nitrogen capacity at 12 bar outlet pressure is 60 Nm³/h, 1000 Nl/min.

Normatives

UNI EN ISO 2503 | UNI EN ISO 5171 | Regolamento (CE) n. 1935/2004

Components

Connection, body, cap and overpressure discharge valve integrated in the pressure regulator, made of CW614N chemically nickel-plated brass.
Pressure adjustment by threaded screw and black ABS knob.
One W21.7x1/14" F R inlet.
One Ø8 mm hose connector on the outlet.
One 0-315 bar inlet pressure gauge, Ø 63 mm, class 2.5.
One 0-16 bar outlet pressure gauge, Ø 63 mm, class 2.5.
Stainless steel springs.
Food-grade NBR diaphragm.
Silicone O-ring.
Teflon seat.
Nylon gaskets.

Maintenance kit

CODE	DESCRIPTION
HKAL001	REDUCER MAINTENANCE EQ JUNIOR FOOD

Behringer S.r.l. via Gualco 4, 16165 Genova ITALY
T +39 010 8309103 **F** +39 010 8309183 **e-mail** info@behringer.it **C.F.** e **P.I.** 01167840998

Technical data

CODE	Q max.	P_1 max.	P_2 max.	INLET CONNECTION	OUTLET CONNECTION	WEIGHT
HRAL031	60 Nm³/h	200 bar	12 bar	W21,7x1/14" 'A'	Hose connector Ø 8 mm	1,6 kg

Technical Images

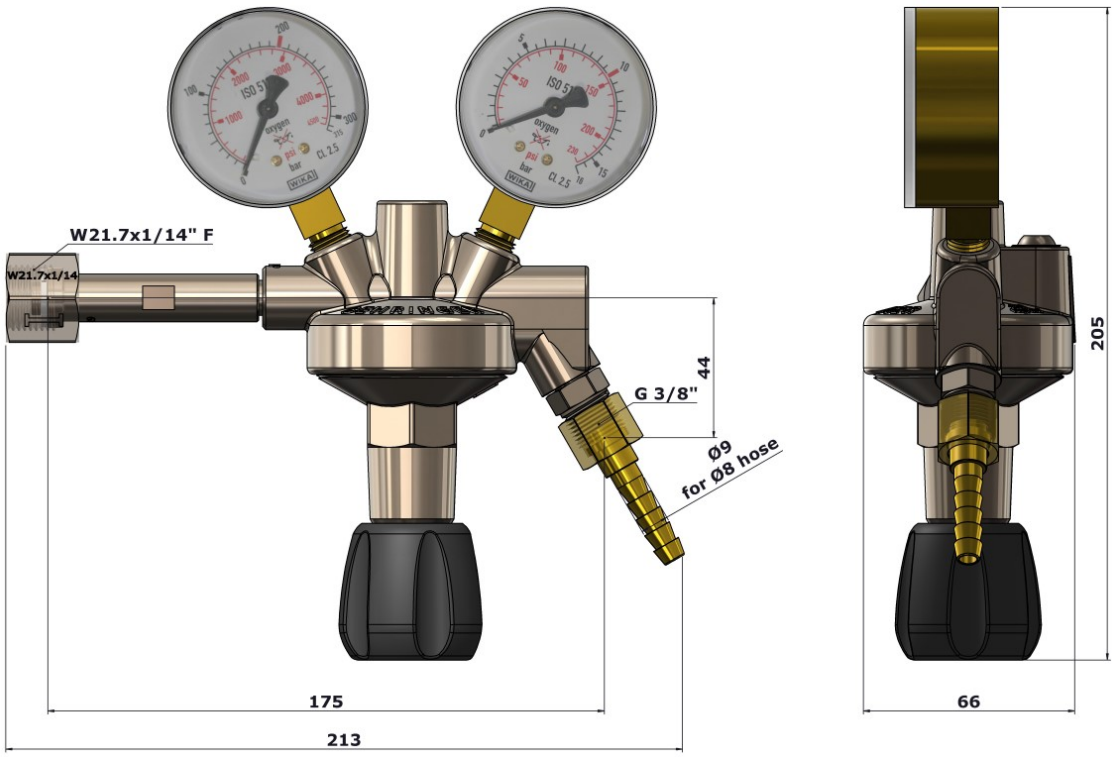

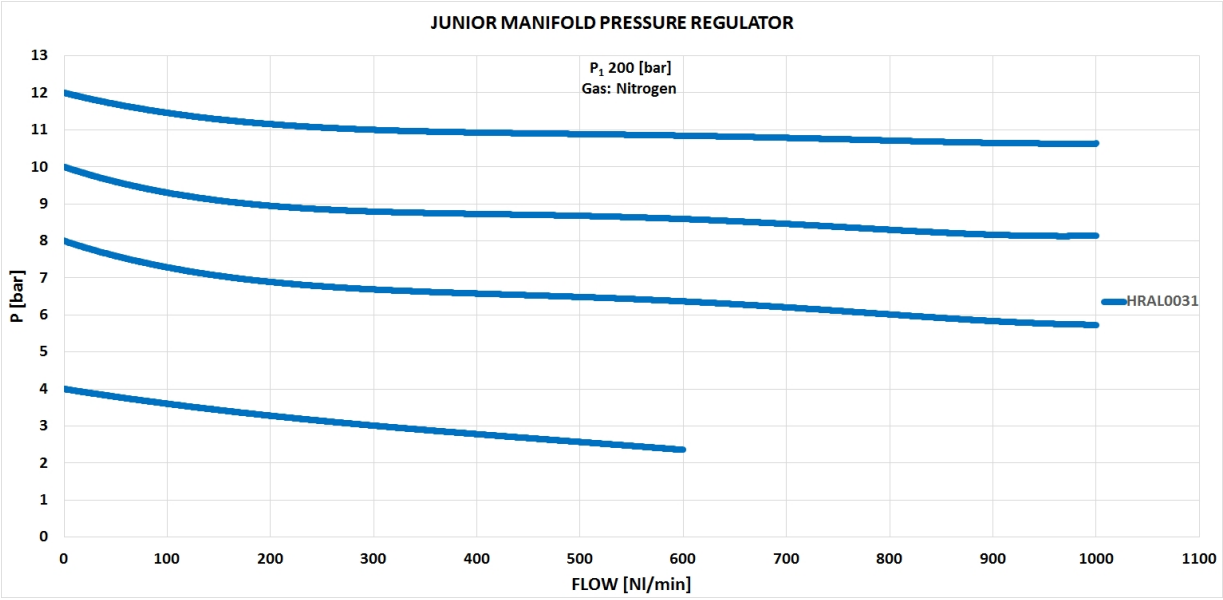

Behringer S.r.l. via Gualco 4, 16165 Genova ITALY

T +39 010 8309103 **F** +39 010 8309183 **e-mail** info@behringer.it **C.F.** e **P.I.** 01167840998