SOCKET LEAF - CZ (CSN 85 2762)

Organismo Notificato n. 0476
Notified Body nr. 0476

Product description

The socket of the new LEAF terminal unit line meets the needs of functionality, safety, innovation and design, in compliance with the CSN 85 2762 standard; The socket has a brass body and a male coupling locking system with steel balls; the coupling flange with the base is rotatable so you can position the terminal unit in the desired orientation; fixing to the base block is simple and maintenance is quick thanks to the replacement of a single pre-assembled cartridge; thanks to the built-in NFC system, traceability and maintenance management are facilitated via the MyBehringer App, which can be installed on your smartphone.

Normatives

UNI EN ISO 9170-1 | UNI CEI EN ISO 13485 | UNI EN ISO 15001 | CSN 85 2762

Components

Chemically nickel-plated brass body.
Release ring.
Stainless steel springs, balls, and filter.
EPDM perox sealing O-ring.

Maintenance kit

CODE	GAS	DESCRIPTION
HK210CZ00	ALL	CARTUCCIA MANUT. PRESA LEAF CSN 85 2762 - N°11

Technical data

CODE	GAS	FLOW RATE	MAXIMUM PRESSURE DROP	WEIGHT
HP301CZA4BEH	Air	40 l/min	0,15 bar	0,12 kg
HP301CZCDBEH	CO_2	40 l/min	0,15 bar	0,12 kg
HP301CZNOBEH	N_2O	40 l/min	0,15 bar	0,12 kg
HP301CZOXBEH	O_2	40 l/min	0,15 bar	0,12 kg

Behringer S.r.l. via Gualco 4, 16165 Genova ITALY
T +39 010 8309103 **F** +39 010 8309183 **e-mail** info@behringer.it **C.F.** e **P.I.** 01167840998

Technical data

CODE	GAS	FLOW RATE	MAXIMUM PRESSURE DROP	WEIGHT
HP301CZVABEH	Vac	25 l/min	0,15 bar	0,12 kg
HP301CZA8BEH	Air-800	350 l/min	0,70 bar	0,12 kg
HP301CZO9BEH	O2 93	40 l/min	0,15 bar	0,12 kg

Technical Images

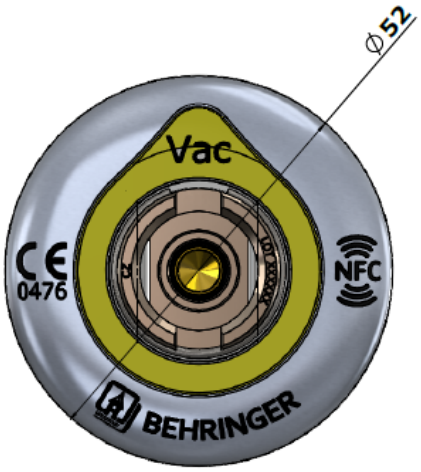

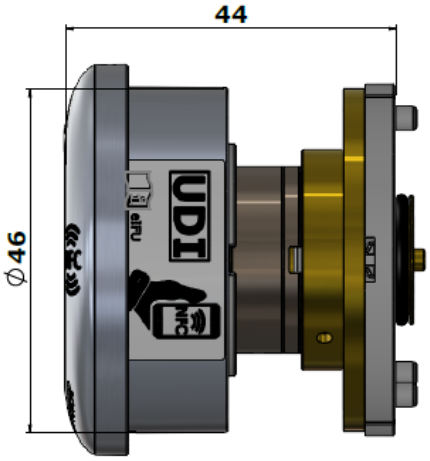

Behringer S.r.l. via Gualco 4, 16165 Genova ITALY
T +39 010 8309103 **F** +39 010 8309183 **e-mail** info@behringer.it **C.F.** e **P.I.** 01167840998