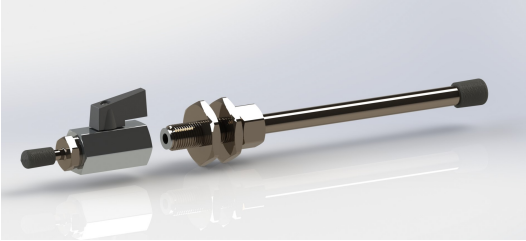

Shut-off valve panel feedthrough

Organismo Notificato n. 0476
Notified Body nr. 0476

Product description

The service shut-off valves are necessary to shut-off each portion of the medical gas and vacuum system; certified medical device in accordance with EN 7396-1; the valve is complete with nut and locknut for bulkhead fixing; supplied with hose connector for Ø6 and Ø8 (Vac) medical tubing and Ø10 and Ø12 (Vac) weldable tubing on the other.
All materials are oxygen compatible, supplied clean and free from oil, grease or dust.

Normatives

UNI EN ISO 7396-1 | UNI EN ISO 15001

Components

N.1 miniball ball valve.
N.1 inlet with Ø10 mm/ Ø12 mm tube.
N.1 outlet with hose connector Ø6 mm / Ø8 mm.
N.1 chemically nickel-plated brass lock nut.

Technical data

CODE	VALVE SIZE	Ø PIPE (IN)	OUT	P. max	WEIGHT
H1290	1/4"	10 mm	Hose connector Ø 6 mm WITH PASSWALL	63 bar	0.18 kg
H1290A	1/4"	12 mm	Hose connector Ø 8 mm WITH PASSWALL	63 bar	0.18 kg

Behringer S.r.l. via Gualco 4, 16165 Genova ITALY
T +39 010 8309103 **F** +39 010 8309183 **e-mail** info@behringer.it **C.F.** e **P.I.** 01167840998

Technical Images

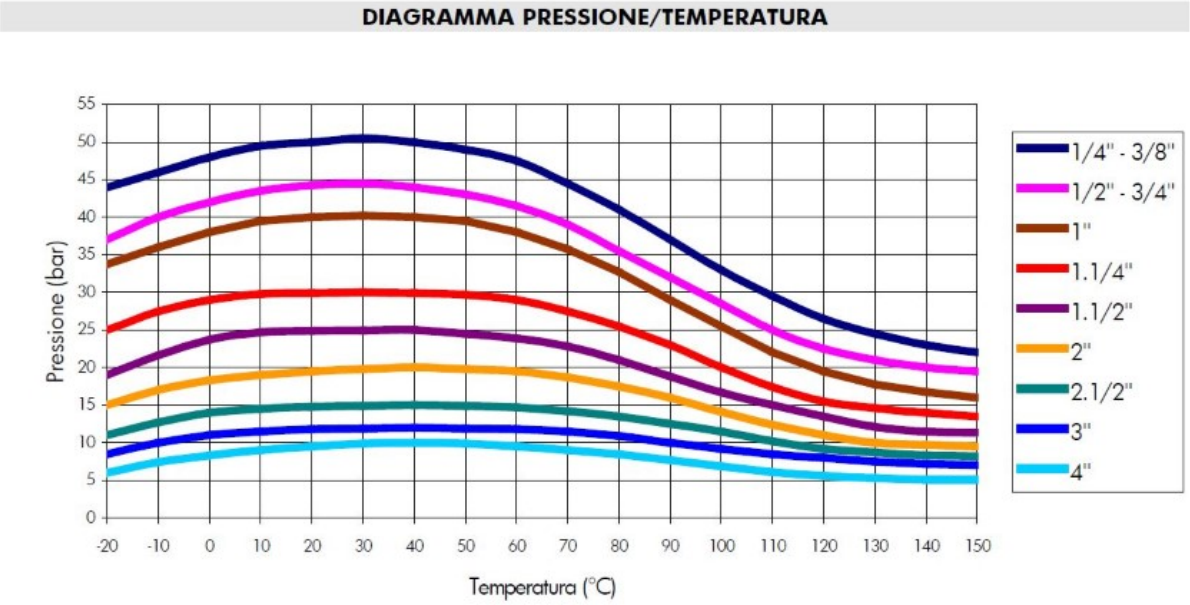

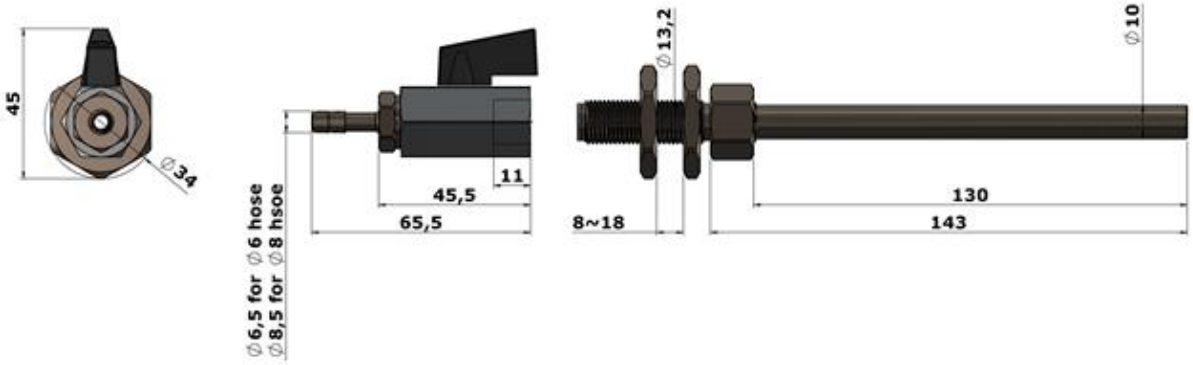

Behringer S.r.l. via Gualco 4, 16165 Genova ITALY
T +39 010 8309103 **F** +39 010 8309183 **e-mail** info@behringer.it **C.F.** e **P.I.** 01167840998