Pure gas devices

HF Single manifold

Product description

Manifold for use of pure gases, consisting of a dual HF-type pressure gauge made of chemically nickel-plated CW614N brass, one high pressure shut-off valve and a bleed valve.Inlet connection is threaded G1/4" M R, outlet connection is G1/4" F R.Its maximum capacity at 10 bar outlet pressure is 24 Nm^3/h, 400 Nl/min.On request the high pressure gauge can have electrical contacts to be connected to a central alarm unit to signal if the manifold is empty.For easy wall mounting, all components are installed on an anodized aluminum plate.A helium leak test at 10-4 mbar l/s can be carried out at the customer's request.

Normatives

UNI EN ISO 7291 | UNI EN ISO 5171

Components

One HF pressure regulator with chemically nickel-plated CW614N brass body with adjustable calibration and stainless steel diaphragm.
Adjustment knob and valve knob made of ABS.
One overpressure discharge valve, built into the pressure regulator, pre-calibrated and with drain channel, G1/4 "M R.
One high pressure shut-off valve with stainless steel diaphragm.
One bleed valve with stainless steel diaphragm, G1/4" F R.
One high pressure gauge with range according to the gas used, class 2.5.
One low pressure gauge with range according to the gas used, class 2.5.
Two anti-siphoning valves on inlets of the high pressure shut-off valve.
Stainless steel springs.
Teflon sealing seat on regulator, nylon 6.6 valve seal seat.
NBR o-ring.
Anodized aluminum wall mount support.

Behringer S.r.l. via Gualco 4, 16165 Genova ITALY
T +39 010 8309103 **F** +39 010 8309183 **e-mail** info@behringer.it **C.F.** e **P.I.** 01167840998

Maintenance kit

CODE	DESCRIPTION
HK138	MAINTENANCE EQ HF A.P. PURE GASES

Technical data

CODE	Q max.	P_1 max.	P_2 max.	RANGE PRESSURE GAUGE	WIDTH	HEIGHT	DEPTH	WEIGHT
HQG002	24 Nm³/h	200 bar - 50 bar N_2O, CO_2	10 bar	0-315 bar / 0-16 bar	220 mm	190 mm	170 mm	2,5 kg
HQG002A	4 Nm³/h	25 bar	1.2 bar	0-40 bar / 0-2.5 bar	220 mm	190 mm	170 mm	2,5 kg
HQG002B	24 Nm³/h	200 bar	10 bar	0-315 bar / 0-16 bar, contact type	220 mm	190 mm	170 mm	2,5 kg
HQG002P	6 Nm³/h	15 bar	2 bar	0-16 bar / 0-2.5 bar	220 mm	190 mm	170 mm	2,5 kg

Technical Images

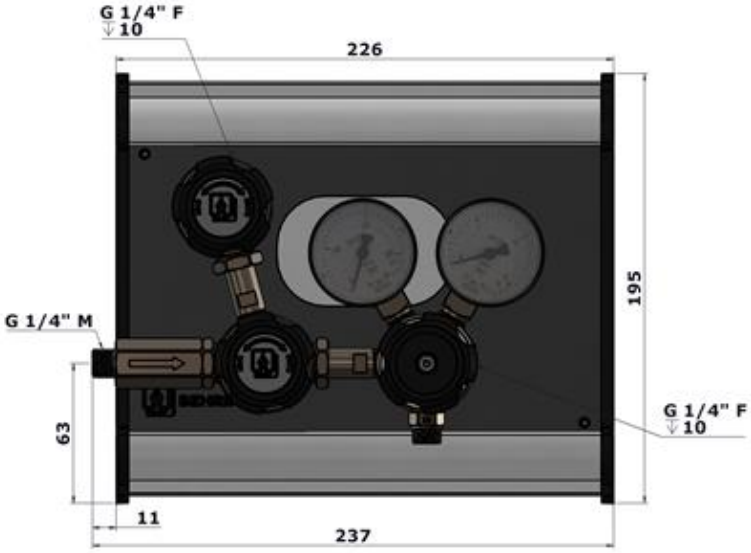

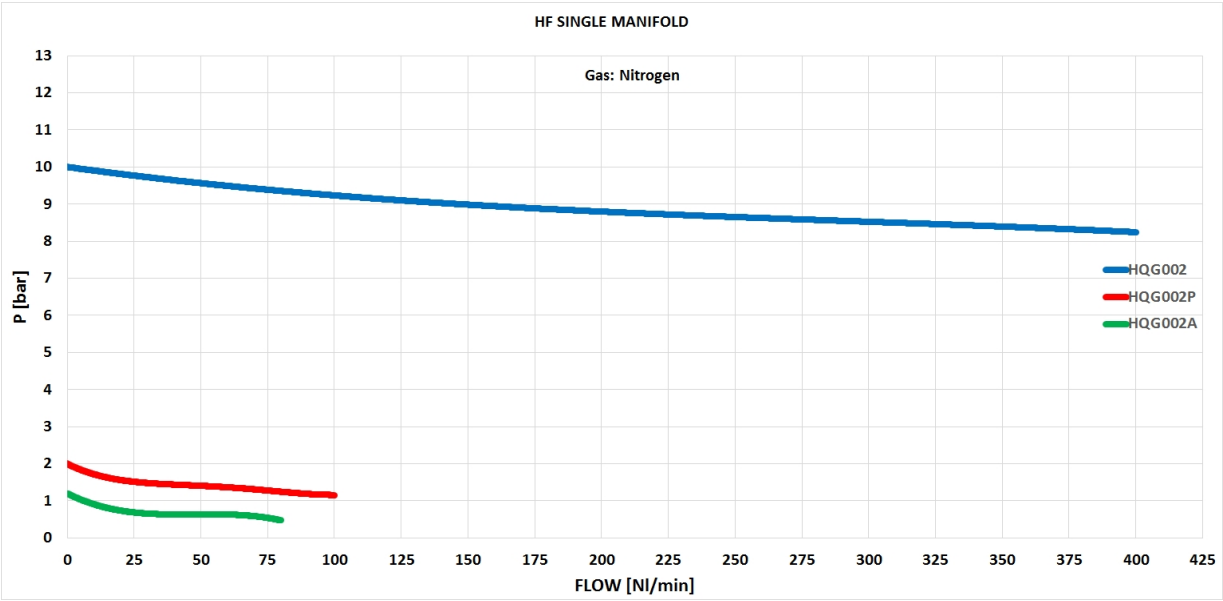

Behringer S.r.l. via Gualco 4, 16165 Genova ITALY
T +39 010 8309103 **F** +39 010 8309183 **e-mail** info@behringer.it **C.F.** e **P.I.** 01167840998